Diritti riservati All rights reserved

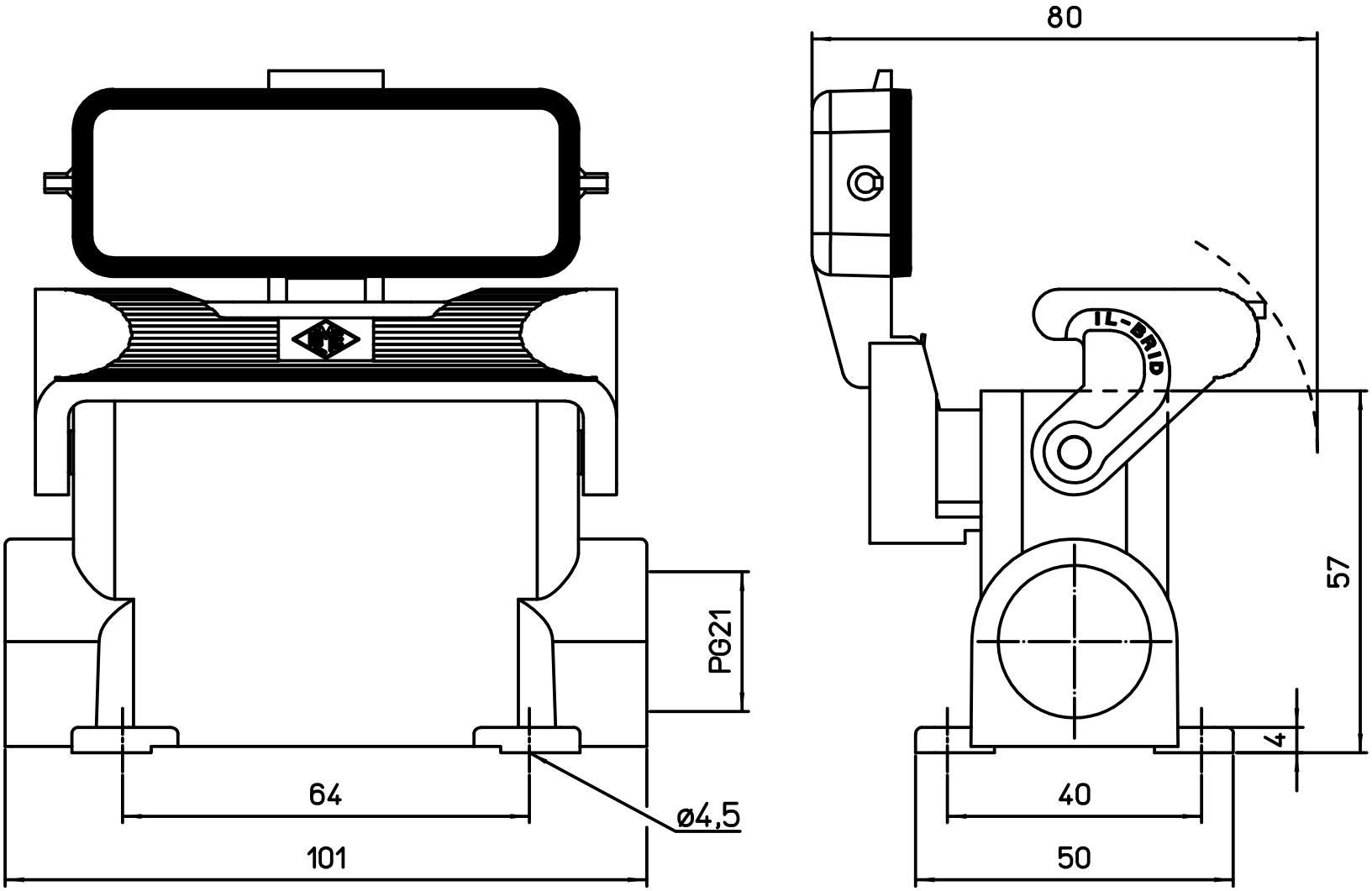

dimensions in mm	
Date	29/10/18
Sign.	D.Cominelli

CZAP 25 LS21

Surface mounting housing with single lever and cover, PG21

Scale 1:1